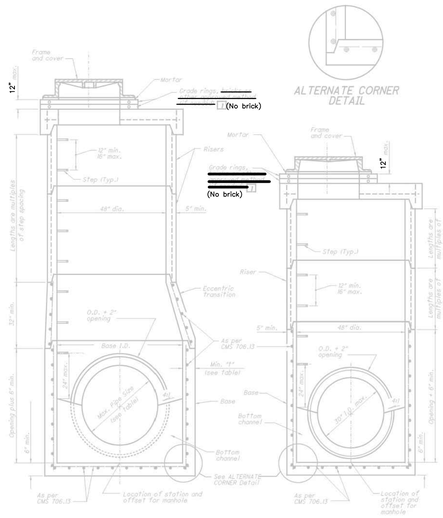

NOTES

GENERAL: With normal wall and soils conditions, this standard precast manhole may be used for any required manhole depth. For tall and assemble sections of the precast manhole, either all tongue or all groove ends up. Lift holes may be provided in each section for handling. Leave handling device for the flat slab in place.

TOP: Provide a flat slab for this section unless an eccentric cone is specified.

TRANSITION (OR REDUCER): This section can be either eccentric cone or flat slab.

BASE: Manhole No. 3 is shown with a monolithic floor and riser which may be cast in one or two operations. A permissable alternate is to set a precast base (with or without a bottom channel) in place and then install the riser section later, when the unit is cast or later, to meet project requirements. Bottom channels may be formed of concrete, except in the base or field constructed as shown on SCD MH-1.1 and MH-3.1.

RISER SECTIONS: Openings for 18" and smaller inlet pipes may be either pre-fabricated or cut in the field provided the sides of the pipe of the springline do not project into the manhole.

CONNECTIONS: Connections between precast manhole sections and pipes on sanitary sewers may be sealed with resilient connectors conforming to ASTM C 923.

JOINT SEAL: Furnish resilient seal between precast manhole sections and risers and flexible gasket joints per CMS 706.04. (ASTM C443)

OPENING: Openings are the O.D. of the pipe being supplied plus 2" when fabricated or field cut. Fill any voids per CMS 601.

MATERIALS: Provide materials for bases and other precast sections, including reinforcing, not specified here, that meet the requirements of CMS 706.03.

DROP PIPE: When specified on the plans, construct drop pipe as shown on SCD MH-3.1.

STEPS, FRAMES AND COVERS: Meet the requirements shown on SCD MH-1.1.

TOP SLAB REBAR: Use epoxy coated reinforcing steel within the top slab.

LEGEND

1 Reconstruction to grade only. Approved materials are kept on file by the Office of Materials Management.

MAXIMUM PIPE SIZES

BASE I.D.	MIN. "1"	MAX. PIPE SIZE
60"	5"	36"
72"	6"	48"
84"	7"	54"
90"	7½"	60"
96"	8"	66"
108"	9"	72"

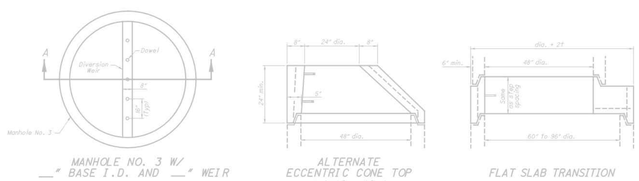

NOTES

MANHOLE NO. 3 W/ __" BASE I.D. AND __" DIVERSION WEIR: Furnish manhole base with precast diversion weir or construct diversion weir from Structural Concrete, 4000 psi compressive strength concrete or Brick and Masonry Units conforming to CMS 601. A bottom channel section for the manhole is not required when a diversion weir is specified on the plans.

Place diversion weir perpendicular to flow of following trunk sewer. Dowel concrete or masonry units into the base of the manhole to a depth of 3" using epoxy coated #4 reinforcing bars. Start dowels at the center of the diversion weir and space 16" on center across the entire weir.

All materials and labor, including excavation and backfill, are paid for at the contract price for **ITEM 611 - MANHOLE NO. 3 WITH __" BASE I.D. AND __" DIVERSION WEIR.**

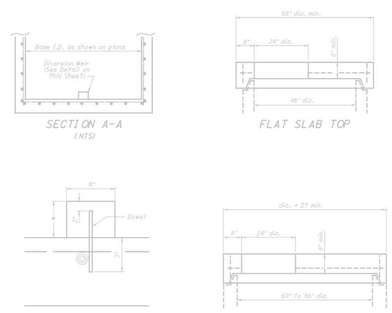

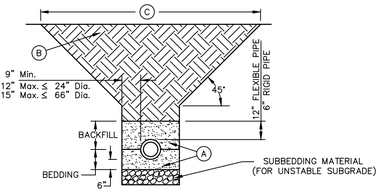

NOTE: (A) ODOT STRUCTURAL BACKFILL, TYPE 2, 703.11

(B) TRENCH BACKFILL:
INSTALLATION UNDER PAVEMENT AND/OR WITHIN A 45-DEGREE INFLUENCE LINE FROM THE PAVEMENT EDGE SHALL BE INSTALLED IN ACCORDANCE WITH O.D.O.T. ITEM 304 AGGREGATE BASE. SLAG MATERIAL AND RECYCLED CONCRETE IS NOT ACCEPTABLE. ADDITIONAL TESTS MAY BE REQUIRED ON THE TYPE OF 304 AGGREGATE BASE TO BE USED TO INSURE IT MEETS ODOT SPEC. 703.17.
THE COUNTY ENGINEER MAY CONSIDER USE OF OTHER MATERIALS UNDER SPECIAL CONDITIONS. A WRITTEN REQUEST, INCLUDING EVIDENCE THAT THE REPLACEMENT MATERIAL WILL BE SUITABLE FOR BACKFILL MUST BE SUBMITTED FOR REVIEW PRIOR TO ANY APPROVAL BEING ISSUED.

COMPACTION REQUIREMENTS ARE AS FOLLOWS:

(a) UNDER PROPOSED PAVEMENT – ANY BACKFILLING OF TRENCHES MUST BE COMPACTED TO A MINIMUM OF 98% OF THE MATERIAL'S STANDARD PROCTOR MAXIMUM DRY DENSITY WITH THE MATERIAL'S MOISTURE CONTENT ADJUSTED TO WITHIN 2% OF THE OPTIMUM PRIOR TO COMPACTION.

(b) NOT UNDER PROPOSED PAVEMENT BUT WITHIN A 45 DEGREE INFLUENCE FROM THE EDGE OF PAVEMENT– ANY BACKFILLING OF TRENCHES MUST BE COMPACTED TO AT LEAST 95% OF THE MATERIAL'S STANDARD PROCTOR MAXIMUM DRY DENSITY WITH THE MATERIAL'S MOISTURE CONTENT ADJUSTED TO WITHIN 2% OF THE OPTIMUM PRIOR TO COMPACTION.

(c) WITHIN THE R/W BUT NOT UNDER PAVEMENT OR WITHIN THE 45 DEGREE INFLUENCE LINE – ANY BACKFILLING OF TRENCHES MUST BE COMPACTED TO AT LEAST 85% OF THE MATERIAL'S STANDARD PROCTOR MAXIMUM DRY DENSITY WITH THE MATERIAL'S MOISTURE CONTENT ADJUSTED TO WITHIN 2% OF THE OPTIMUM PRIOR TO COMPACTION.

(d) IN DEPTHS OVER 8 FEET AND WHEN COMPACTING WITH A HOE-PAC OR EQUAL HYDRAULIC COMPACTOR, A CONTRACTOR MAY INSTALL THE FIRST LIFT UP TO 3 FEET IN DEPTH BEFORE COMPACTING . SUBSEQUENT LIFTS SHALL BE COMPACTED AS PER THE ABOVE.

ADDITIONALLY, ODOT ITEM 611 AND ASTM D2321 MUST BE ADHERED TO. IF ANY CONFLICTING COMPACTION PERCENTAGES ARE FOUND TO EXIST BETWEEN THOSE INDICATED ABOVE AND ODOT SPECIFICATIONS, THE HIGHER COMPACTION PERCENTAGE SHALL GOVERN.

THESE REQUIREMENTS PERTAIN TO INSTALLATION OF ALL UTILITIES.

UTILITY OR UTILITY CONNECTION TRENCH

N.T.S.

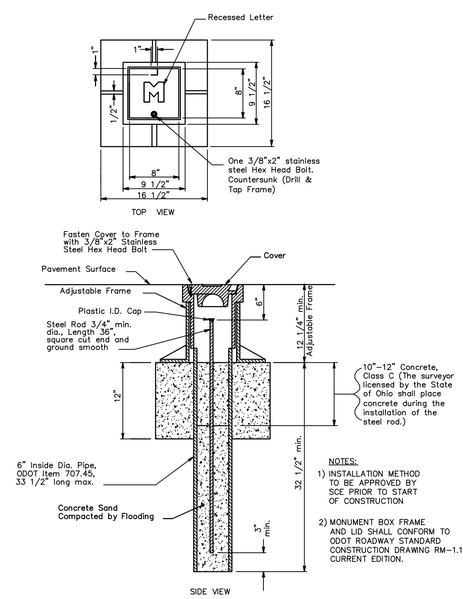

NOTES:
1) INSTALLATION METHOD TO BE APPROVED BY SCE PRIOR TO START OF CONSTRUCTION
2) MONUMENT BOX FRAME AND LID SHALL CONFORM TO ODOT ROADWAY STANDARD CONSTRUCTION DRAWING RM-1.1, CURRENT EDITION.

SCE ADJUSTABLE MONUMENT BOX

N.T.S.

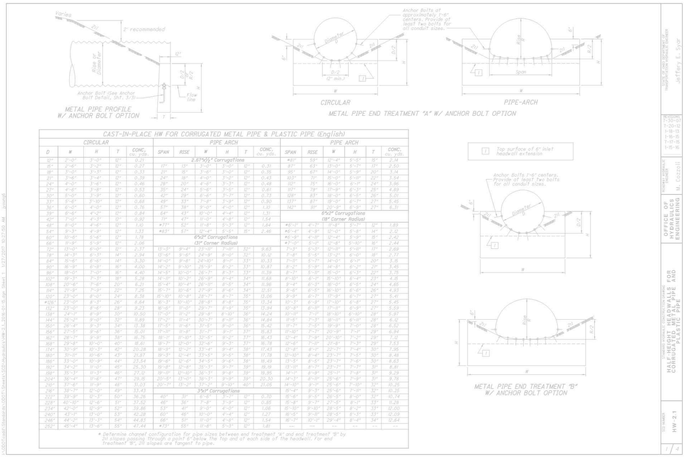

CAST-IN-PLACE HW FOR CORRUGATED METAL PIPE & PLASTIC PIPE (English)

CIRCULAR				PIPE ARCH					PIPE ARCH				
D	W	H	T	CONC. (C.Y.)	Span	Rise	W	X	T	CONC. (C.Y.)	Span	Rise	W	X	T	CONC. (C.Y.)
2 FT/610 Corrugations																
12"	2'-0"	2'-0"	1'-0"	0.5	14"	23"	2'-0"	1'-0"	1'-0"	0.5	17"	13"	2'-0"	1'-0"	1'-0"	0.5
15"	2'-0"	2'-0"	1'-0"	0.5	18"	29"	2'-0"	1'-0"	1'-0"	0.5	21"	15"	2'-0"	1'-0"	1'-0"	0.5
18"	2'-0"	2'-0"	1'-0"	0.5	22"	36"	2'-0"	1'-0"	1'-0"	0.5	24"	18"	2'-0"	1'-0"	1'-0"	0.5
24"	2'-0"	2'-0"	1'-0"	0.5	29"	45"	2'-0"	1'-0"	1'-0"	0.5	31"	23"	2'-0"	1'-0"	1'-0"	0.5
30"	2'-0"	2'-0"	1'-0"	0.5	36"	57"	2'-0"	1'-0"	1'-0"	0.5	38"	28"	2'-0"	1'-0"	1'-0"	0.5
36"	2'-0"	2'-0"	1'-0"	0.5	43"	66"	2'-0"	1'-0"	1'-0"	0.5	45"	33"	2'-0"	1'-0"	1'-0"	0.5
42"	2'-0"	2'-0"	1'-0"	0.5	50"	75"	2'-0"	1'-0"	1'-0"	0.5	52"	38"	2'-0"	1'-0"	1'-0"	0.5
48"	2'-0"	2'-0"	1'-0"	0.5	57"	83"	2'-0"	1'-0"	1'-0"	0.5	59"	43"	2'-0"	1'-0"	1'-0"	0.5
54"	2'-0"	2'-0"	1'-0"	0.5	64"	92"	2'-0"	1'-0"	1'-0"	0.5	66"	48"	2'-0"	1'-0"	1'-0"	0.5
60"	2'-0"	2'-0"	1'-0"	0.5	71"	101"	2'-0"	1'-0"	1'-0"	0.5	73"	53"	2'-0"	1'-0"	1'-0"	0.5
2 2/3 FT/813 Corrugations																
66"	2'-0"	2'-0"	1'-0"	0.5	79"	110"	2'-0"	1'-0"	1'-0"	0.5	80"	58"	2'-0"	1'-0"	1'-0"	0.5
72"	2'-0"	2'-0"	1'-0"	0.5	86"	119"	2'-0"	1'-0"	1'-0"	0.5	87"	63"	2'-0"	1'-0"	1'-0"	0.5
78"	2'-0"	2'-0"	1'-0"	0.5	93"	128"	2'-0"	1'-0"	1'-0"	0.5	94"	68"	2'-0"	1'-0"	1'-0"	0.5
84"	2'-0"	2'-0"	1'-0"	0.5	100"	137"	2'-0"	1'-0"	1'-0"	0.5	101"	73"	2'-0"	1'-0"	1'-0"	0.5
90"	2'-0"	2'-0"	1'-0"	0.5	107"	146"	2'-0"	1'-0"	1'-0"	0.5	108"	78"	2'-0"	1'-0"	1'-0"	0.5
96"	2'-0"	2'-0"	1'-0"	0.5	114"	155"	2'-0"	1'-0"	1'-0"	0.5	115"	83"	2'-0"	1'-0"	1'-0"	0.5
102"	2'-0"	2'-0"	1'-0"	0.5	121"	164"	2'-0"	1'-0"	1'-0"	0.5	122"	88"	2'-0"	1'-0"	1'-0"	0.5
108"	2'-0"	2'-0"	1'-0"	0.5	128"	173"	2'-0"	1'-0"	1'-0"	0.5	129"	93"	2'-0"	1'-0"	1'-0"	0.5
3 FT/915 Corrugations																
114"	2'-0"	2'-0"	1'-0"	0.5	136"	182"	2'-0"	1'-0"	1'-0"	0.5	136"	98"	2'-0"	1'-0"	1'-0"	0.5
120"	2'-0"	2'-0"	1'-0"	0.5	143"	191"	2'-0"	1'-0"	1'-0"	0.5	143"	103"	2'-0"	1'-0"	1'-0"	0.5
126"	2'-0"	2'-0"	1'-0"	0.5	150"	200"	2'-0"	1'-0"	1'-0"	0.5	150"	108"	2'-0"	1'-0"	1'-0"	0.5
132"	2'-0"	2'-0"	1'-0"	0.5	157"	209"	2'-0"	1'-0"	1'-0"	0.5	157"	113"	2'-0"	1'-0"	1'-0"	0.5
138"	2'-0"	2'-0"	1'-0"	0.5	164"	218"	2'-0"	1'-0"	1'-0"	0.5	164"	118"	2'-0"	1'-0"	1'-0"	0.5
144"	2'-0"	2'-0"	1'-0"	0.5	171"	227"	2'-0"	1'-0"	1'-0"	0.5	171"	123"	2'-0"	1'-0"	1'-0"	0.5
150"	2'-0"	2'-0"	1'-0"	0.5	178"	236"	2'-0"	1'-0"	1'-0"	0.5	178"	128"	2'-0"	1'-0"	1'-0"	0.5
156"	2'-0"	2'-0"	1'-0"	0.5	185"	245"	2'-0"	1'-0"	1'-0"	0.5	185"	133"	2'-0"	1'-0"	1'-0"	0.5
162"	2'-0"	2'-0"	1'-0"	0.5	192"	254"	2'-0"	1'-0"	1'-0"	0.5	192"	138"	2'-0"	1'-0"	1'-0"	0.5
168"	2'-0"	2'-0"	1'-0"	0.5	199"	263"	2'-0"	1'-0"	1'-0"	0.5	199"	143"	2'-0"	1'-0"	1'-0"	0.5
174"	2'-0"	2'-0"	1'-0"	0.5	206"	272"	2'-0"	1'-0"	1'-0"	0.5	206"	148"	2'-0"	1'-0"	1'-0"	0.5
180"	2'-0"	2'-0"	1'-0"	0.5	213"	281"	2'-0"	1'-0"	1'-0"	0.5	213"	153"	2'-0"	1'-0"	1'-0"	0.5
4 FT/1220 Corrugations																
192"	2'-0"	2'-0"	1'-0"	0.5	228"	300"	2'-0"	1'-0"	1'-0"	0.5	228"	163"	2'-0"	1'-0"	1'-0"	0.5
198"	2'-0"	2'-0"	1'-0"	0.5	235"	309"	2'-0"	1'-0"	1'-0"	0.5	235"	168"	2'-0"	1'-0"	1'-0"	0.5
204"	2'-0"	2'-0"	1'-0"	0.5	242"	318"	2'-0"	1'-0"	1'-0"	0.5	242"	173"	2'-0"	1'-0"	1'-0"	0.5
210"	2'-0"	2'-0"	1'-0"	0.5	249"	327"	2'-0"	1'-0"	1'-0"	0.5	249"	178"	2'-0"	1'-0"	1'-0"	0.5
216"	2'-0"	2'-0"	1'-0"	0.5	256"	336"	2'-0"	1'-0"	1'-0"	0.5	256"	183"	2'-0"	1'-0"	1'-0"	0.5
222"	2'-0"	2'-0"	1'-0"	0.5	263"	345"	2'-0"	1'-0"	1'-0"	0.5	263"	188"	2'-0"	1'-0"	1'-0"	0.5
228"	2'-0"	2'-0"	1'-0"	0.5	270"	354"	2'-0"	1'-0"	1'-0"	0.5	270"	193"	2'-0"	1'-0"	1'-0"	0.5
234"	2'-0"	2'-0"	1'-0"	0.5	277"	363"	2'-0"	1'-0"	1'-0"	0.5	277"	198"	2'-0"	1'-0"	1'-0"	0.5
240"	2'-0"	2'-0"	1'-0"	0.5	284"	372"	2'-0"	1'-0"	1'-0"	0.5	284"	203"	2'-0"	1'-0"	1'-0"	0.5
246"	2'-0"	2'-0"	1'-0"	0.5	291"	381"	2'-0"	1'-0"	1'-0"	0.5	291"	208"	2'-0"	1'-0"	1'-0"	0.5
252"	2'-0"	2'-0"	1'-0"	0.5	298"	390"	2'-0"	1'-0"	1'-0"	0.5	298"	213"	2'-0"	1'-0"	1'-0"	0.5

* Determine channel configuration for pipe sizes between and treatment "A" and treatment "B" by interpolation. Place a minimum of 6" of fill on top and of each side of the headwall. For end treatment "B" the pipe will be longer by pipe.

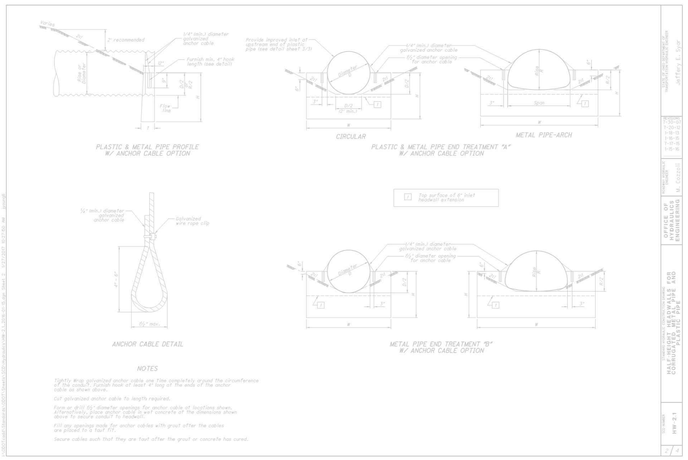

NOTES

Tightly wrap galvanized anchor cable one time completely around the circumference of the corrugated metal pipe at least 6" from the end of the pipe. Cut the anchor cable as shown above.

Cut galvanized anchor cable to length required.

Form an 8(D) (D=diameter spacing) for anchor cable at locations shown. Galvanized anchor cable (D=diameter) must be temporarily at the downstream shown during to secure conduit to headwall.

Fill any spacing gap for anchor cables with grout after the cables are glued to a taut (D).

Secure cables such that they are held after the grout or concrete has cured.

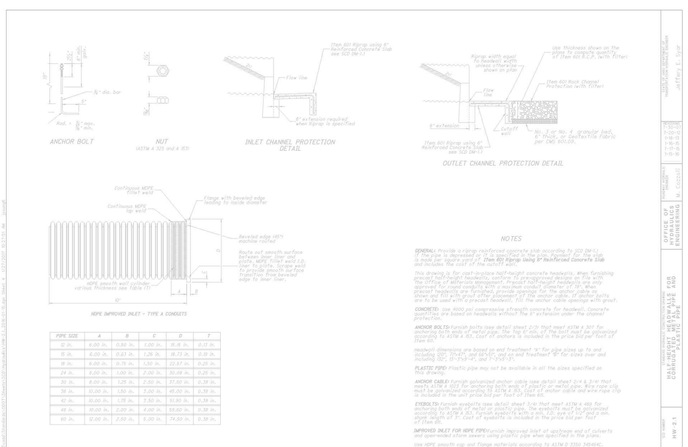

PIPE SIZE	A	B	C	D	T
12 in.	6.00 in.	0.94 in.	1.00 in.	9.41 in.	0.17 in.
15 in.	6.00 in.	0.83 in.	1.00 in.	16.13 in.	0.30 in.
18 in.	6.00 in.	0.76 in.	1.00 in.	23.87 in.	0.43 in.
24 in.	6.00 in.	1.00 in.	2.00 in.	30.68 in.	0.55 in.
30 in.	8.00 in.	1.08 in.	2.00 in.	37.50 in.	0.38 in.
36 in.	8.00 in.	1.30 in.	2.00 in.	45.30 in.	0.45 in.
42 in.	8.00 in.	1.79 in.	2.50 in.	51.80 in.	0.59 in.
48 in.	10.00 in.	2.00 in.	4.00 in.	59.80 in.	0.38 in.
60 in.	10.00 in.	2.50 in.	5.00 in.	74.30 in.	0.38 in.

NOTES

GENERAL: Provide a cast-in-place reinforced concrete pipe according to 200 Series in the plans or determined by **Item 603 Pipe Using 3" Reinforced Concrete Slab** and include the cost of the headwall and end treatment.

This drawing is for cast-in-place half-height concrete headwalls. When furnishing precast headwalls, conform to manufacturer's designs on file with the Office of Materials Management. Precast headwalls shall be only used in locations where the end treatment is a flat slab. Precast headwalls are prohibited in locations where the end treatment is a pipe riser. Precast headwalls are not to be used with a precast headwall. Fill the anchor cable openings with grout.

CONCRETE: Use 4000 psi compressive strength concrete for headwall. Concrete quantities are based on headwalls without the 3" extension under the channel protection.

ANCHOR BOLTS: Furnish bolts (see detail sheet) 3/4 that meet ASTM A 307 for connecting the pipe and end treatment. The anchor bolts must be galvanized according to ASTM A 153. The cost of anchor bolts is included in the price bid per foot of **Item 603.**

Approval dimensions are based on end treatment "A" for pipe sizes up to and including 30". Provide end section and end treatment "B" for sizes over and including 36". Provide end section and end treatment "B" for sizes over and including 36". Provide end section and end treatment "B" for sizes over and including 36".

PLASTIC PIPE: Plastic pipe may not be available in all the sizes specified on this drawing.

ANCHOR CABLE: Furnish galvanized anchor cable (see detail sheet) 3/4 x 5 in that meet ASTM A 475 for connecting the pipe and end treatment. The anchor cable must be galvanized according to ASTM A 153. The cost of anchor cable and wire rope clip is included in the unit price bid per foot of **Item 603.**

EYEBOLTS: Furnish eyebolts (see detail sheet) 3/4 that meet ASTM A 475 for connecting the pipe and end treatment. The eyebolts must be galvanized according to ASTM A 153. The cost of eyebolts is included in the price bid per foot of **Item 603.**

IMPROVED INLET FOR HDPE PIPE: Furnish improved inlet of weirboard and of cutwerts and open ended entire sections using plastic pipe sizes specified in the plans.

Use HDPE smooth cap and flange sections according to ASTM D 3350 345464C.

GPD GROUP.
Glaus, Pyle, Schomer, Burns & DeHaven, Inc.
520 South Main Street, Suite 2531
Akron, Ohio 44311
330.572.2100 Fax 330.572.2101

Copyright; Glaus, Pyle, Schomer, Burns & DeHaven, Inc. 2016

REV.	DATE	DESCRIPTION
	01/23/17	ISSUED FOR REVIEW
	04/17/17	REVISED PER AGENCY COMMENTS

THE PRESERVE AT MILLER'S FARM
PHASE 4
SE CORNER OF SR 18 AND MEDINA LINE RD
COPLEY, OHIO 44321

DETAILS

ISSUED FOR:	
PERMIT	01/23/17
BID	
CONSTRUCTION	
AS-BUILT	

PROJECT MANAGER	DESIGNER
MAL	ALF

JOB NO.
2013258.04

Drawing Name: O:\2013\2013258\04\DWGS\Construction Documents\Sheets\2013258804 Notes And Details.dwg
June 2, 2017 10:28 AM - twright